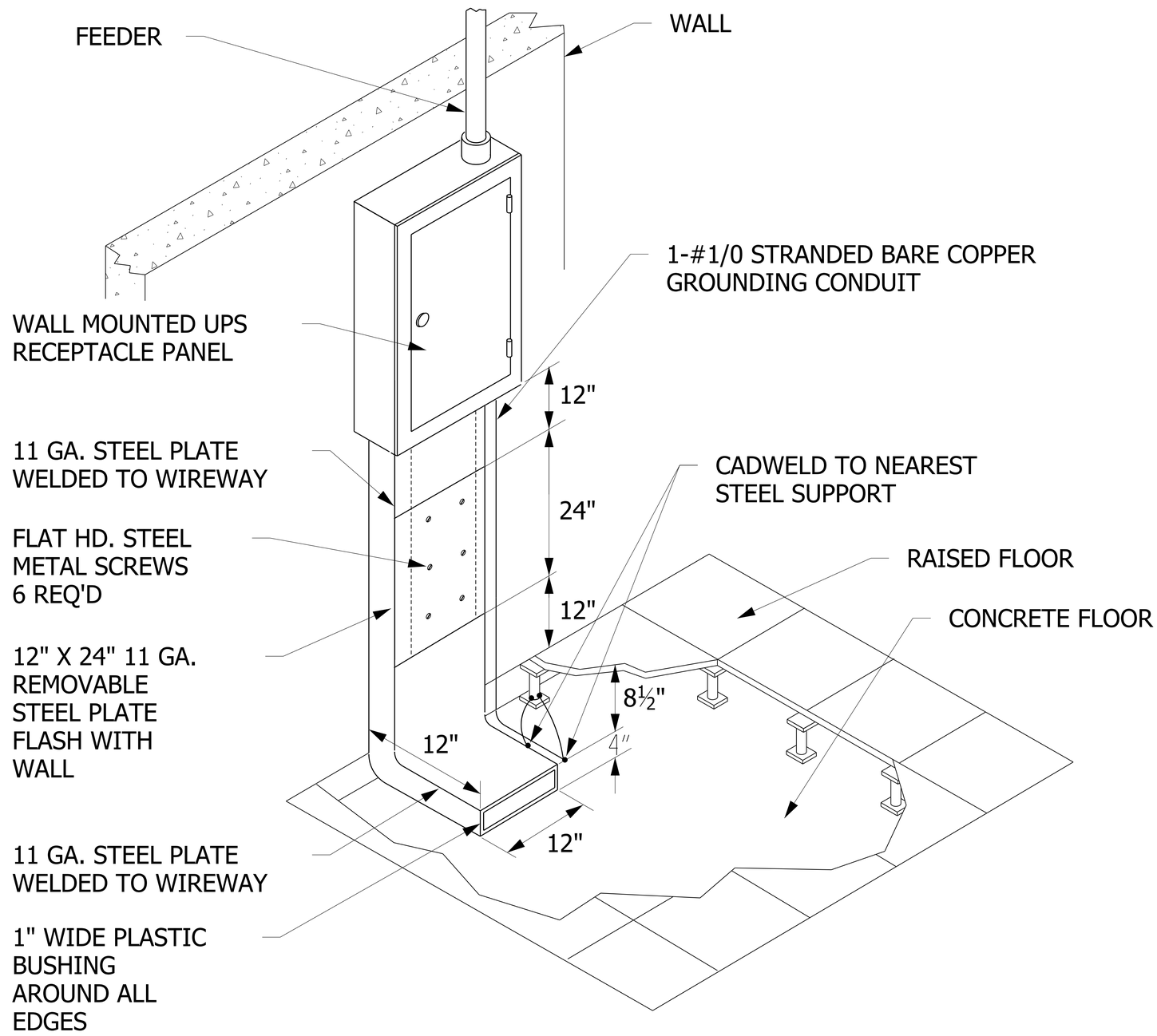


# WALL MOUNTED UPS RECEPTACLE PANEL DETAIL

NO SCALE

26053328.001